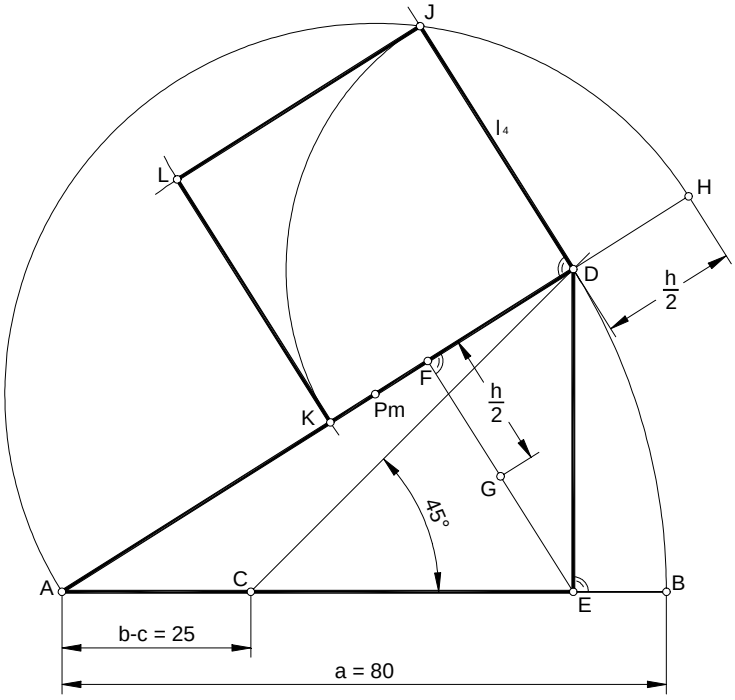
J
L
H
D
h/2
F
Pm
K
h/2
G
45°
A
C
E
B
b-c = 25
a = 80

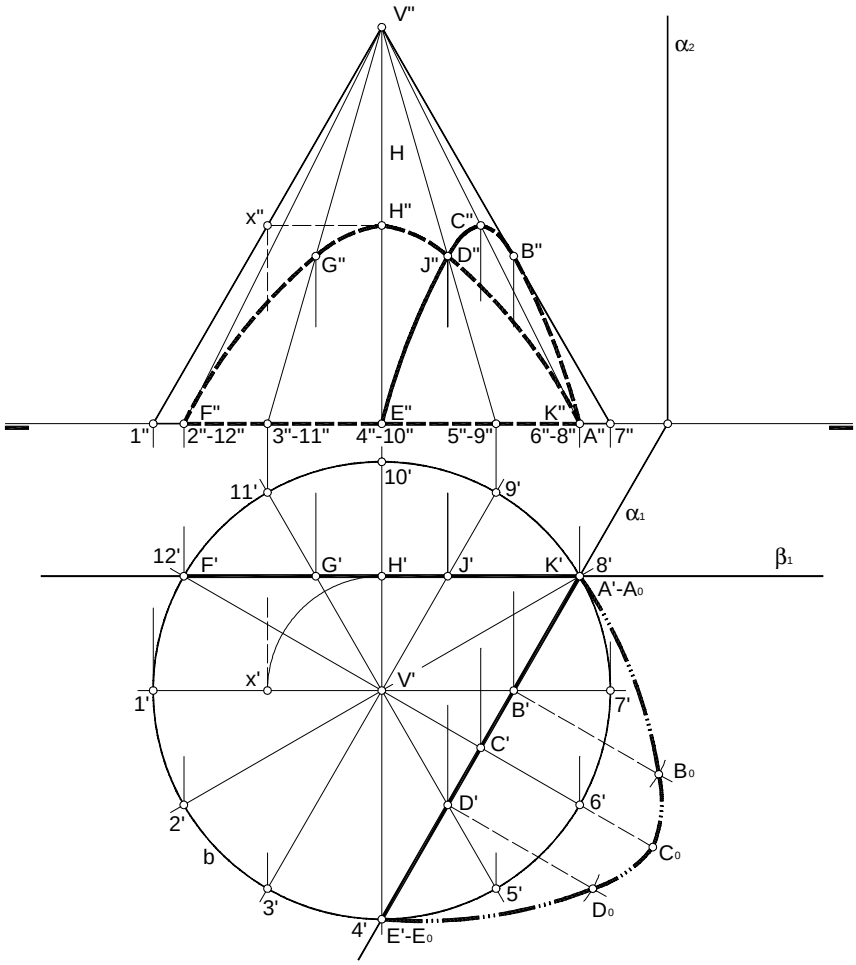
V"
α2
H
x"
H"
C"
G"
J"
D"
B"
F"
E"
K"
1"
2"-12"
3"-11"
4"-10"
5"-9"
6"-8"
A"
7"
10'
11'
9'
α1
12'
F'
G'
H'
J'
K'
8'
β1
A'-A0
x'
V'
1'
B'
7'
C'
B0
D'
6'
2'
b
C0
5'
3'
D0
4'
E'-E0

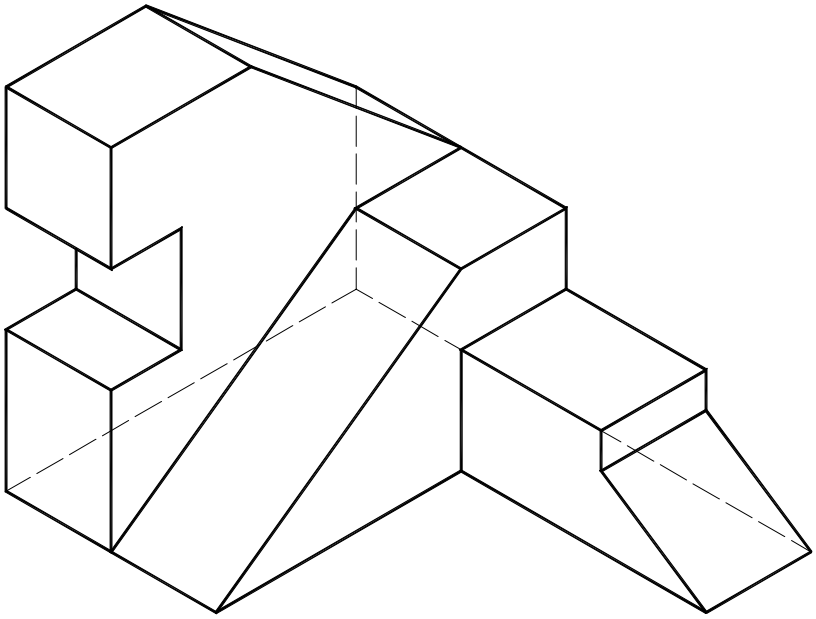

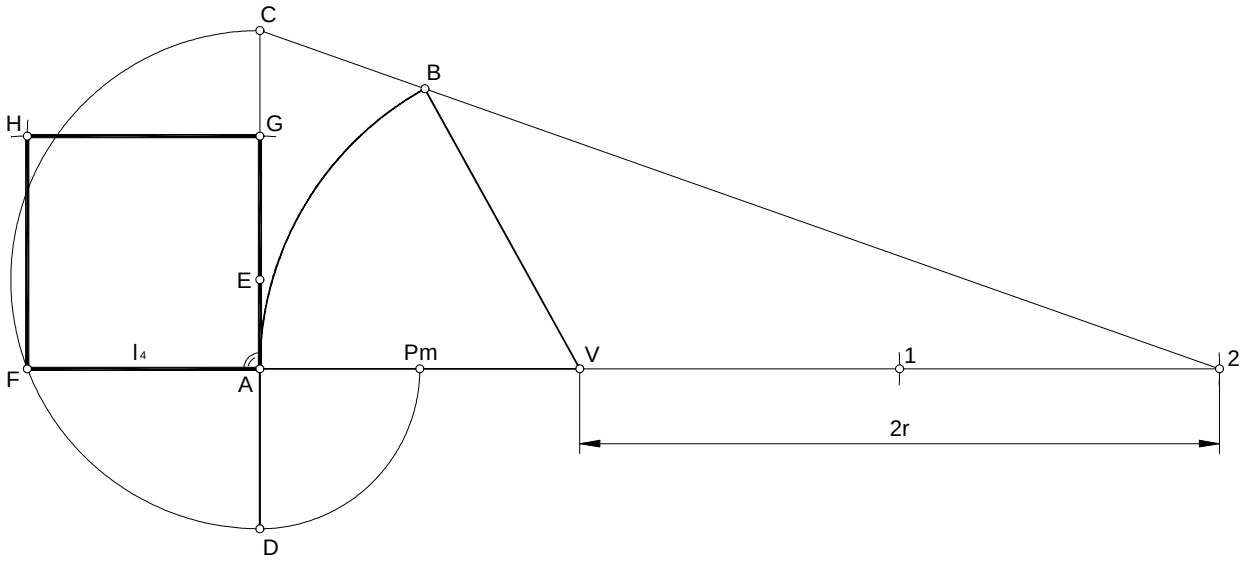
C
B
H
G
E
F
A
Pm
V
1
2
2r
D

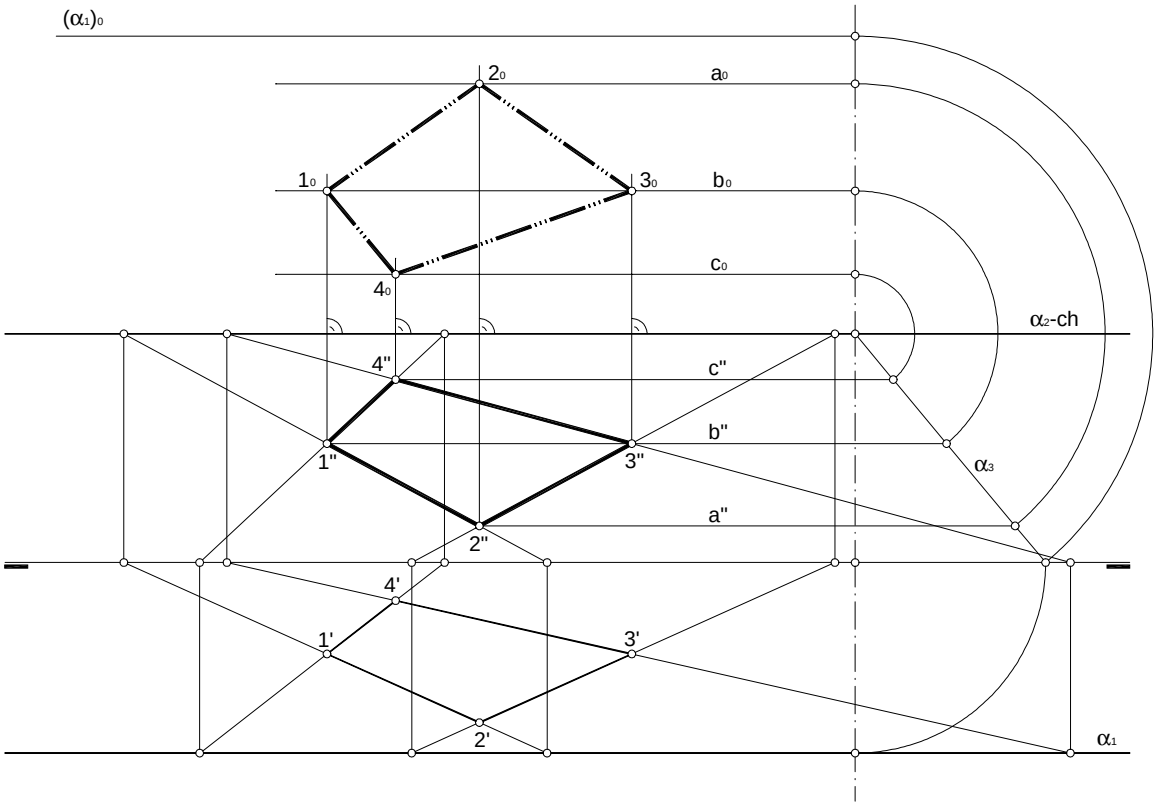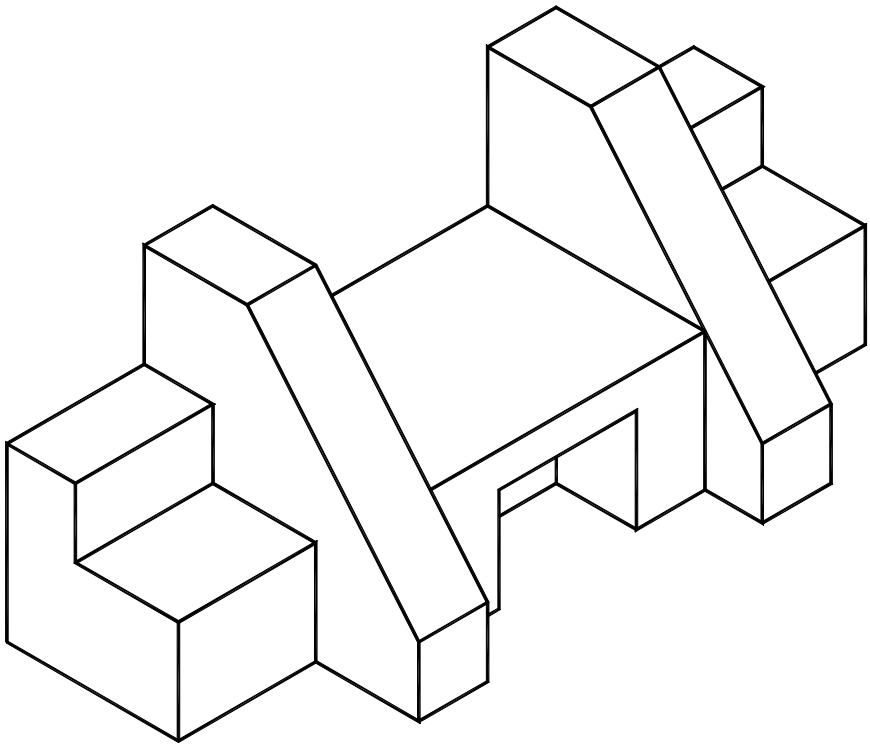
(α1)0
20
a0
10
30
b0
c0
40
α2-ch
4"
c"
b"
1"
3"
α3
a"
2"
4'
1'
3'
2'
α1